Specifications

DESCRIPTION

- Handheld shower (non-metallic)
- 69" double interlock spiral hose (metal)
- Vacuum breaker
- Adjustable wall bracket

OPERATION

- 3-Function massage, fine and full: rotate outer ring to select
- Wall bracket rotates to adjust angle of hand shower

FLOW

- Designed to deliver 2.5 gpm (9.5 L/min) at 60 psi

STANDARDS

- Designed and manufactured to comply with the applicable requirements of: CSA B-125 and ASME A112.18.1M and ASSE 1014 and all applicable specifications referenced therein

WARRANTY

- Warranted for one year against material or manufacturing defects

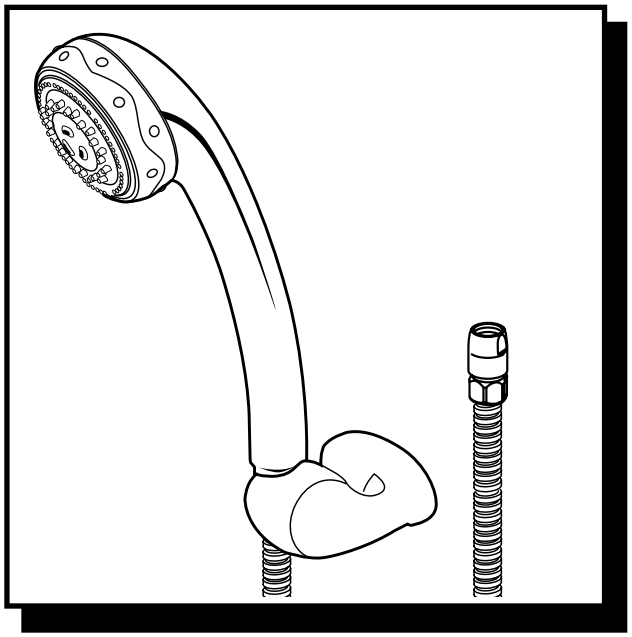

Handheld 3-Function Massaging Shower

Model: 3875 (Chrome)

Available Colors Are:
3875W - Glacier
3875CP - Chrome/Polished Brass
3875P - Polished Brass

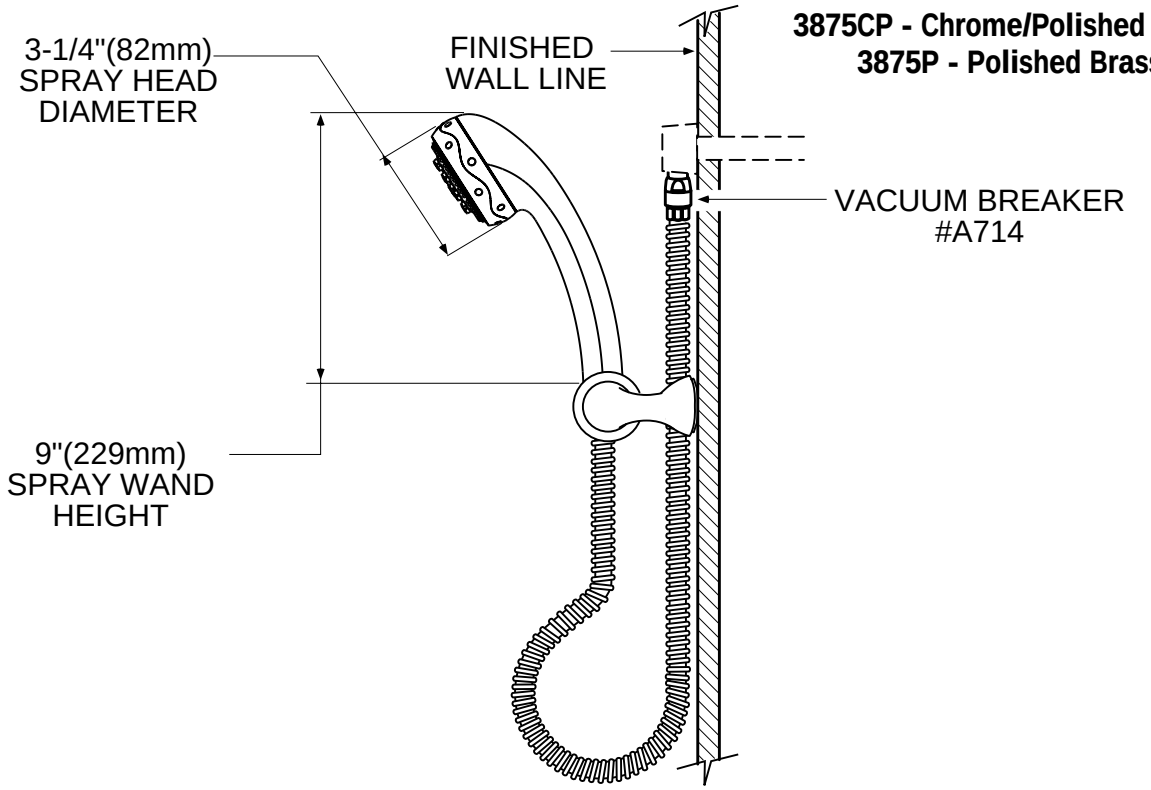

CRITICAL DIMENSIONS

(DO NOT SCALE)